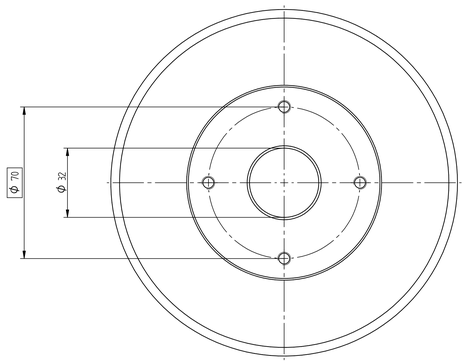

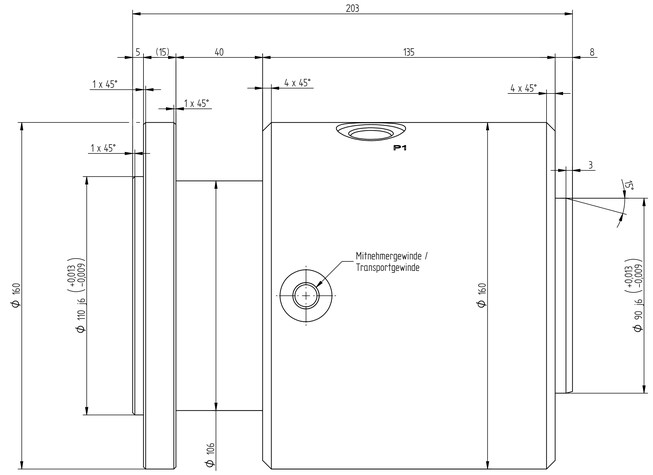

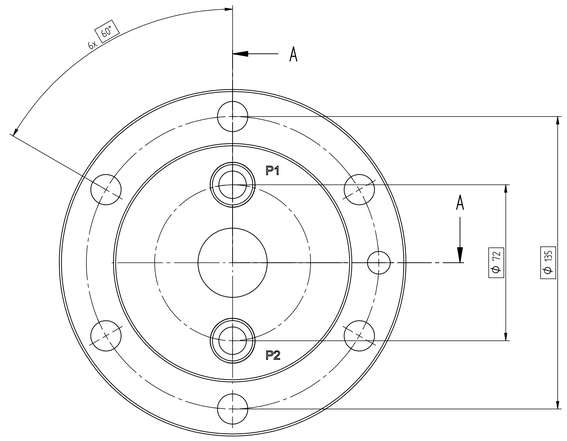

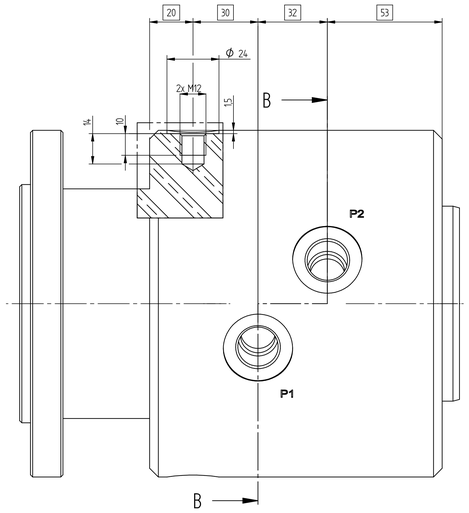

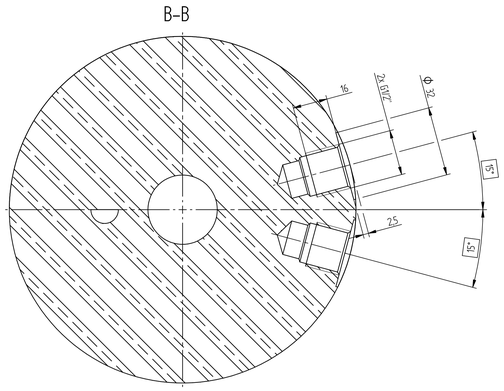

Technische Daten:

- Es dürfen keine Radial- oder Axialkräfte auf die Drehdurchführung wirken
- Keine metallischen Gleitflächen in radialer und axialer Richtung
- Kugellager zwischen Rotor und Stator
- Dichtungsfläche hartverchromt
- Stator 1.4057 – X17CrNi16-2
- Rotor 1.4057 – X17CrNi16-2

Technical data:

- Radial or axial loads must not be applied to the rotary joint
- No metallic sliding surfaces in axial or radial direction
- Ball bearing between stator and rotor
- Running surfaces hard chrome plated
- Stator stainless steel 1.4057
- Rotor stainless steel 1.4057

Betriebsbedingungen Working conditions		
max. Drehzahl max. rotating speed	200	U /min rpm
zul. Temperaturbereich Wasser permitted Temperature range water	+1 ...+80	°C
zul. Temperaturbereich Luft permitted Temperature range air	-20 ...+80	°C

Anschlüsse Connections	Stator	Rotor	Medium	Nenndruck Nominal pressure	Prüfdruck Test pressure
P1	1 x G 1/2"	1 x G 1/2"	Luft / Wasser Air / Water	10 bar	15 bar
P2	1 x G 1/2"	1 x G 1/2"	Luft / Wasser Air / Water	10 bar	15 bar

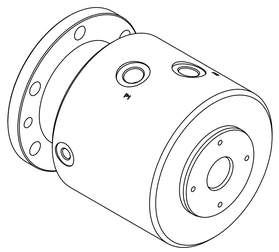

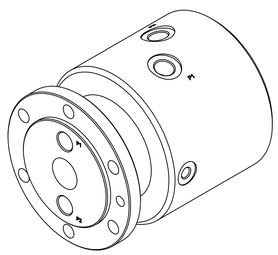

1:2

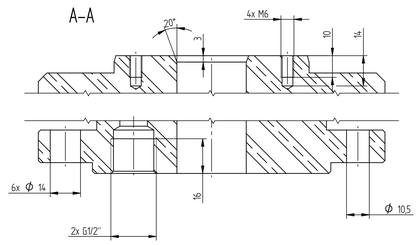

DIN ISO 5456-2	TOLERANCES	DIN ISO 1101T5 +0,3 +0,1 −0,1 −0,3	FINISH
SCALE 1:1	REFERENCE 2		
WEIGHT 24,798 kg	REFERENCE 1		MATERIAL 1.4057 (X17CrNi16-2)
CONTRACTS	DWG NO 366000007	REVISION B–	FIRST RELEASE 05.04.2013
DESIGNER LBAUER 28.09.2023	APPROVED LCREITER 28.09.2023		
SCHLEIFRING	Bezeichnung / DESCRIPTION 2-Weg Drehdurchführung 2-Weg Drehdurchfuehrung		CHARGE NO 2000655512
SIZE/DIM G1/2" – G1/2" / MAX.200U/MIN			DOCUMENT TYPE
			SHEET 1/1

Draft: 1000749165/002/000/02 | Model: 1000749165/020/000/02 | A0

This drawing and the property of Schleifring GmbH, whether patented or not, is to be treated as a confidential. The drawing may only be used for purposes agreed upon in writing. It may not be copied or otherwise reproduced in whole or in part without express written consent or provided. Whether we be not liable for the payment of damages. Breach of a civil application, we contractors too as depart of law and criminal prosecution.